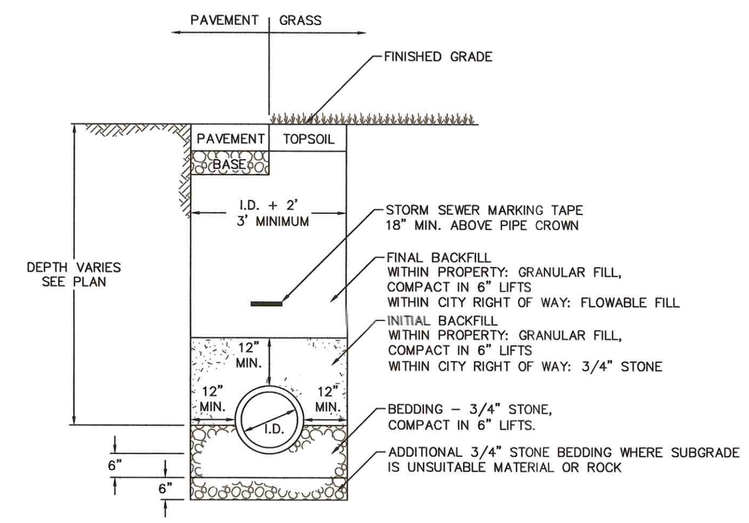

STORM SEWER TRENCH

SCALE: NOT TO SCALE

NOTES

1. UNLESS OTHERWISE NOTED, INTERIOR DIAMETER (D) SHALL BE 4 FEET. AT A MINIMUM, INTERIOR DIAMETER SHALL BE 6" LARGER THAN THE LARGEST DIAMETER PIPE.
2. FRAME AND GRATE SHALL CONFORM TO MASSACHUSETTS DEPARTMENT OF TRANSPORTATION CONSTRUCTION STANDARD DETAILS:
   - 2.1. CATCH BASINS
     - 2.1.1. E204.2.0 WHERE ADJACENT TO CURBS.
     - 2.1.2. E201.6.0 IN OTHER AREAS.
     - 2.1.3. GRATES SHALL COMPLY WITH E201.10.0 EXCEPT THAT THE OPENINGS SHALL BE 1.5"–2" SQUARE.
   - 2.2. MANHOLES
     - 2.2.1. E202.6.0 AND E202.8.0.
     - 2.2.2. MANHOLE COVERS SHALL HAVE "DRAIN" CAST INTO THE COVER.
3. CATCH BASIN HOODS SHALL CONFORM CONFORM TO MASSACHUSETTS DEPARTMENT OF TRANSPORTATION CONSTRUCTION STANDARD DETAILS E201.12.0.
4. STEPS SHALL CONFORM TO ASTM C478.
5. STRUCTURES SHALL BE DESIGNED FOR HS–20 LOADING.
6. REINFORCING STEEL SHALL CONFORM TO ASTM A185.
7. WATERTIGHT GASKET JOINTS SHALL BE BUTYL RESIN CONFORMING TO ASTM C990.
8. FLAT TOP SECTIONS ARE TO BE USED FOR STRUCTURE WITH AN INTERIOR DIAMETER (D) OF 6 FEET OR GREATER AND WHEN REQUIRED DUE TO PIPE COVER.

STORM STRUCTURE NOTES

SCALE: NOT TO SCALE

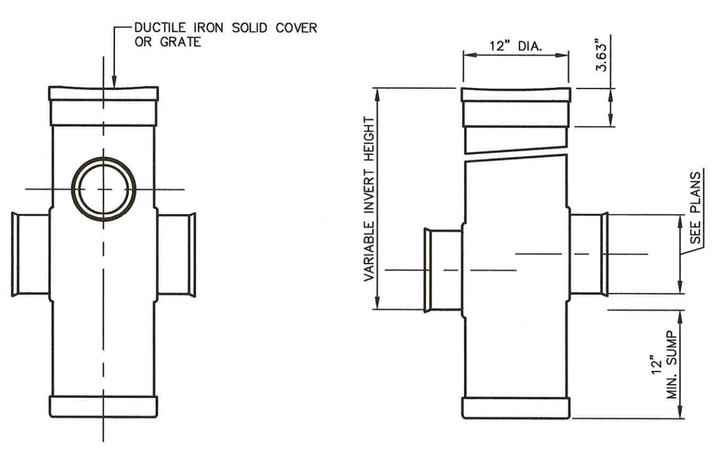

NOTE:
GRATES AND SOLID COVERS SHALL BE 12" DIAMETER DROP–IN STYLE.

YARD DRAIN

SCALE: NOT TO SCALE

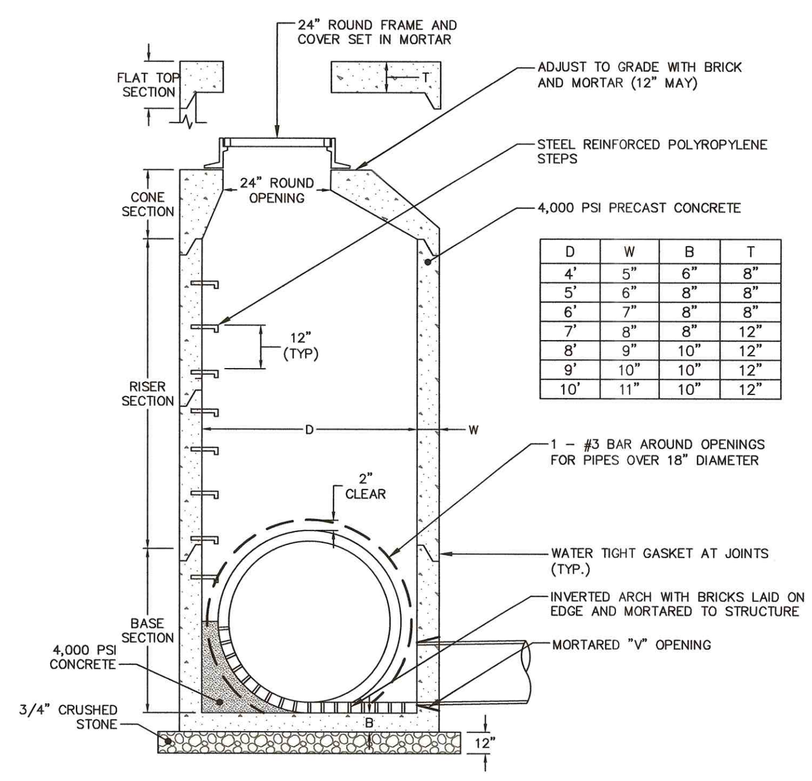

D	W	B	T
4'	5"	6"	8"
5'	6"	8"	8"
6'	7"	8"	8"
7'	8"	8"	12"
8'	9"	10"	12"
9'	10"	10"	12"
10'	11"	10"	12"

STORM MANHOLE (DMH)

SCALE: NOT TO SCALE

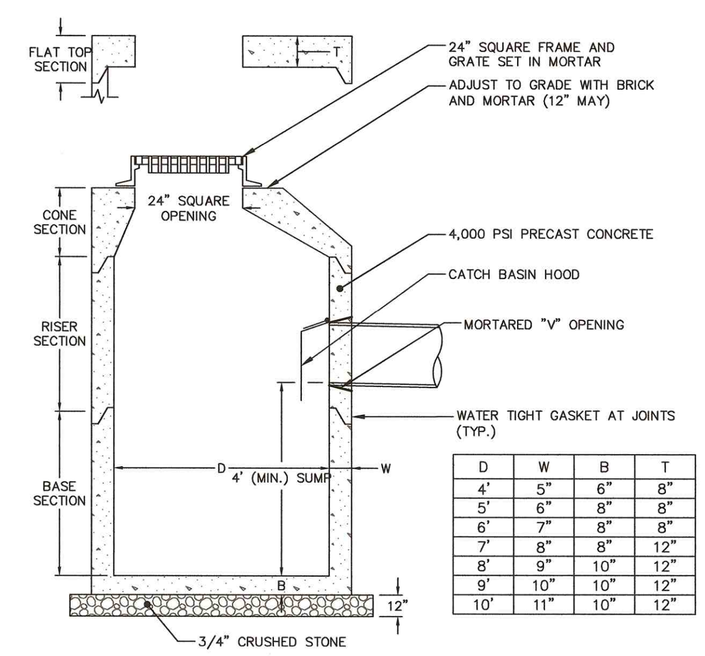

D	W	B	T
4'	5"	6"	8"
5'	6"	8"	8"
6'	7"	8"	8"
7'	8"	8"	12"
8'	9"	10"	12"
9'	10"	10"	12"
10'	11"	10"	12"

PRECAST CONCRETE CATCH BASIN (CB)

SCALE: NOT TO SCALE

No.	DATE	DESCRIPTION	DESIGNER	REVIEWER
5.	10/12/2021	REVISED FINISHED FLOOR ELEVATIONS	JHD	MS
4.	7/2/2021	RESPONSE TO CITY STAFF COMMENTS	JHD	MS
3.	5/13/2021	RESPONSE TO CITY STAFF COMMENTS	JHD	MS
2.	3/31/2021	RESPONSE TO CITY STAFF COMMENTS	JHD	MS
1.	3/12/2021	RESPONSE TO CITY STAFF COMMENTS	JHD	MS

COMMONWEALTH OF MASSACHUSETTS
MICHAEL SULLIVAN
No. 49782
REGISTERED PROFESSIONAL ENGINEER
10/12/2021

SCALE:
HORZ.: N.T.S.
VERT.:
DATUM:
HORZ.:
VERT.:
0
GRAPHIC SCALE

FUSS & O'NEILL
108 MYRTLE STREET, SUITE 502
QUINCY, MA 02171
617.282.4675
www.fando.com

ASCEND MASS, LLC
STORMWATER MANAGEMENT DETAILS
115 COGGESHALL STREET
NEW BEDFORD MASSACHUSETTS

PROJ. No.: 20191061.T10
DATE: 1/8/2021

CD-504

File Path: J:\DWG\P2019\1061\T10\Civil\Plan\20191061T10_DET01.dwg Layout: CD-504 Plotted: Tue, October 12, 2021 - 3:50 PM User: jdeninger
Plotter: AUTOCAD PDF (GENERAL DOCUMENTATION).PC3 CTB File: FO.STB
MS VIEW:
LAYER STATE: